Preserving Partial Order Runs in Parametric Time Petri Nets

Étienne André[1], Thomas Chatain[2], César Rodríguez[1]

[1]LIPN, Université Paris 13, France

[2]LSV, ENS Cachan & CNRS, INRIA Saclay, France

ACSD, Bruxelles, 26 June 2015

Parametric Timed Systems

Timed models:

- Time bounds for firing delays
- Time/timed Petri nets, timed automata, ...

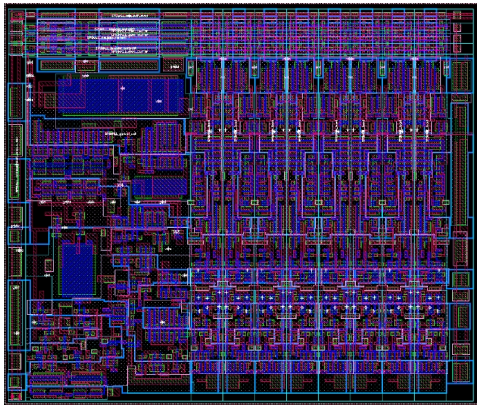

Example of asynchronous circuit

Challenges:

- Exact delay unknown, but known to be in $[60, 70]$
- Robustness: safe if we check with delay 50 and implement 50.01?
- Improve latencies: until what value can 10 be decreased?

Parameter synthesis:

- Consider that timing constants are unknown constants: parameters
- Find valuations such that something good happens

Example

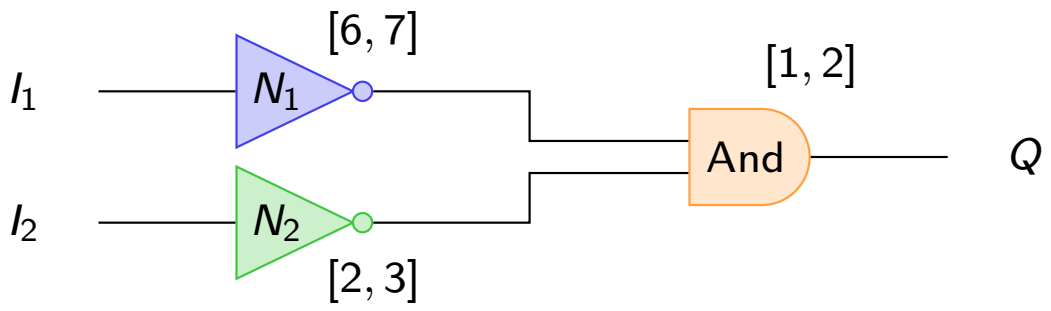

Example

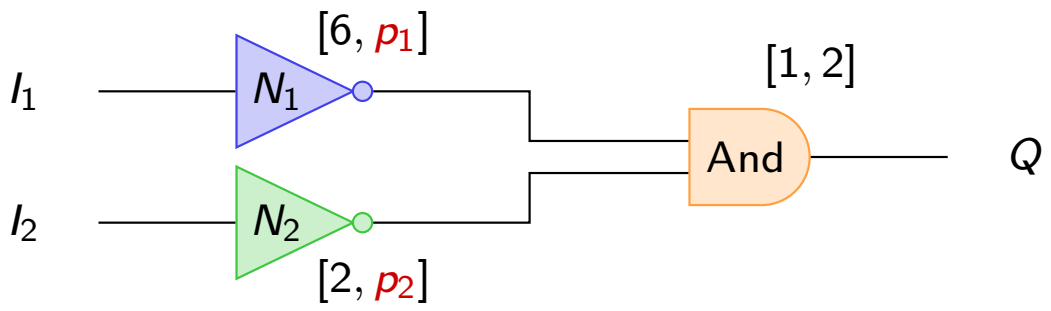

Reference valuation: $\langle p_1, p_2 \rangle := \langle 7, 3 \rangle$

Example

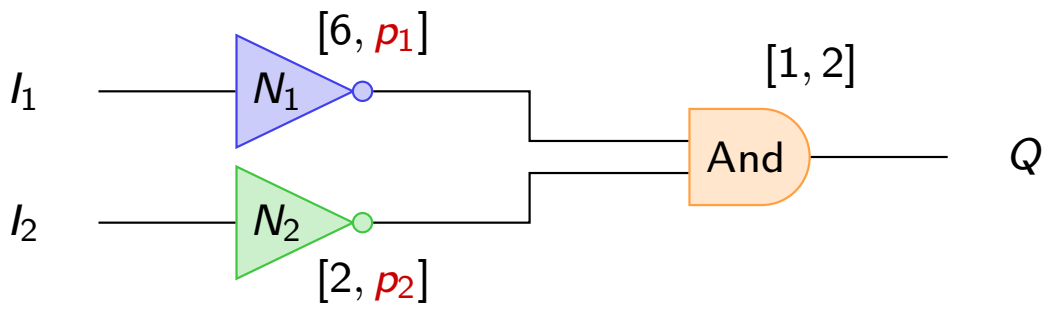

Reference valuation: $\langle p_1, p_2 \rangle := \langle 7, 3 \rangle$

Questions:

- Can we increase p_1, p_2 while preserving the reference behaviour?
- Safe if we implement $\langle p_1, p_2 \rangle = \langle 6.99, 2.99 \rangle$?
- Can we increase p_2 at the cost of decreasing p_1?

Synthesis Problems

Large class of synthesis problems:

Reachability Synthesis ("EF-synthesis") [Alur, Henzinger, Vardi 1993]

Given

- system model M over parameters $P := \{p_1, \ldots, p_n\}$, and
- a set U of states,

find parameter valuations $v \colon P \to \mathbb{R}$ such that

- U is unreachable in $M[\![\mathrm{v}]\!]$.

* where $M[\![\mathrm{v}]\!]$ is like M with parameter $p \in P$ substituted by $v(p)$.

Synthesis Problems

Large class of synthesis problems:

Inverse Method [André, Chatain, Encrenaz, Fribourg 2009]

Given

- system model M over parameters $P := \{p_1, \ldots, p_n\}$, and
- a reference parameter valuation v_0,

find parameter valuations $v \colon P \to \mathbb{R}$ such that

- the sequential, untimed behaviour of $M[\![\mathrm{v}]\!]$ equals $M[\![\mathrm{v}_0]\!]$.

* where $M[\![\mathrm{v}]\!]$ is like M with parameter $p \in P$ substituted by $v(p)$.

Synthesis Problems

Large class of synthesis problems:

This paper

Given

- system model M over parameters $P := \{p_1, \ldots, p_n\}$, and
- a reference parameter valuation v_0,

find parameter valuations $v \colon P \to \mathbb{R}$ such that

- the ~~sequential~~ partially-ordered, untimed behaviour of $M[\![\mathrm{v}]\!]$ equals $M[\![\mathrm{v}_0]\!]$.

* where $M[\![\mathrm{v}]\!]$ is like M with parameter $p \in P$ substituted by $v(p)$.

Motivation – Limitations of the Inverse Method

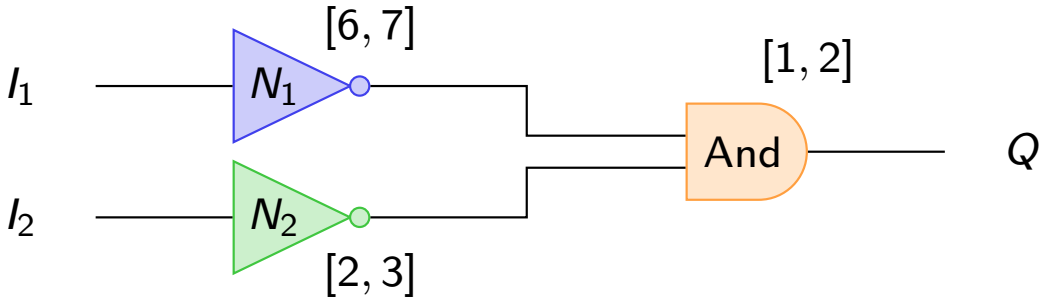

Motivation – Limitations of the Inverse Method

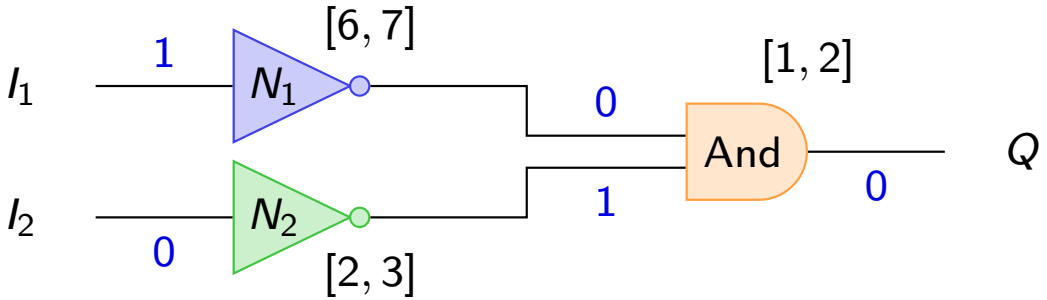

Motivation – Limitations of the Inverse Method

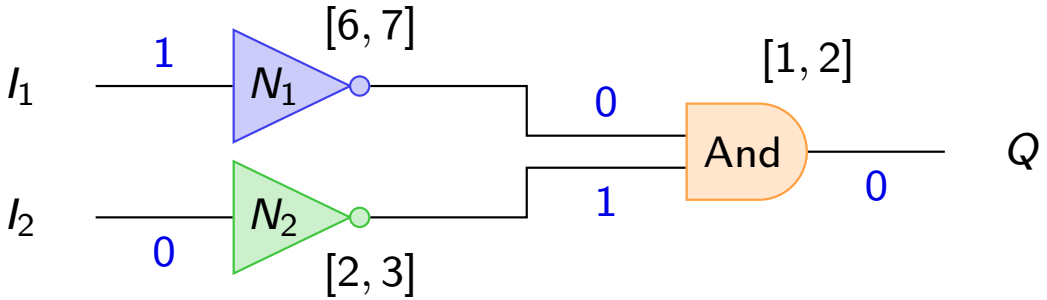

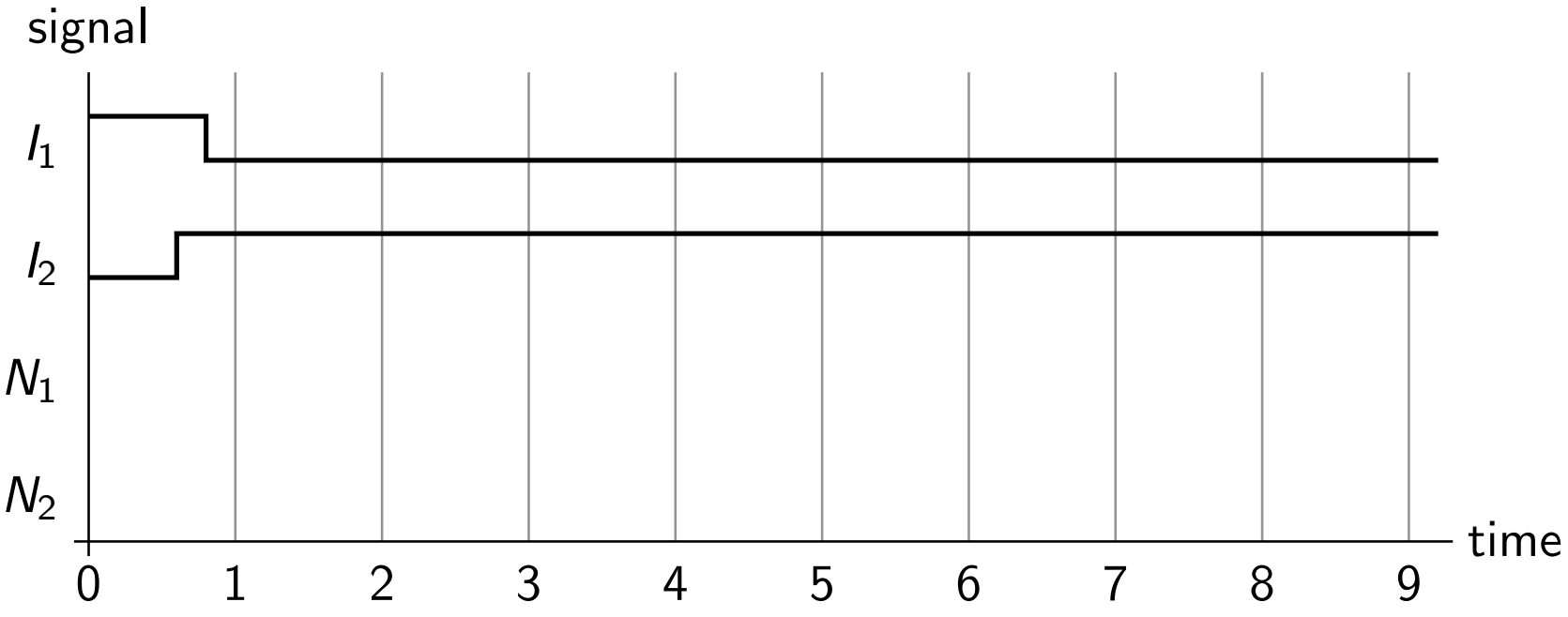

Motivation – Limitations of the Inverse Method

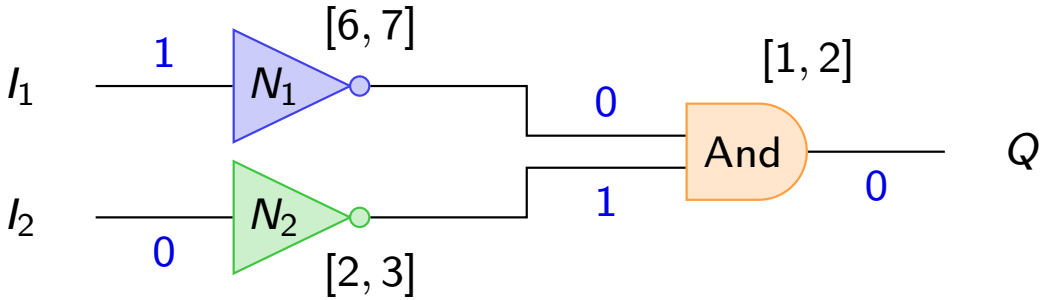

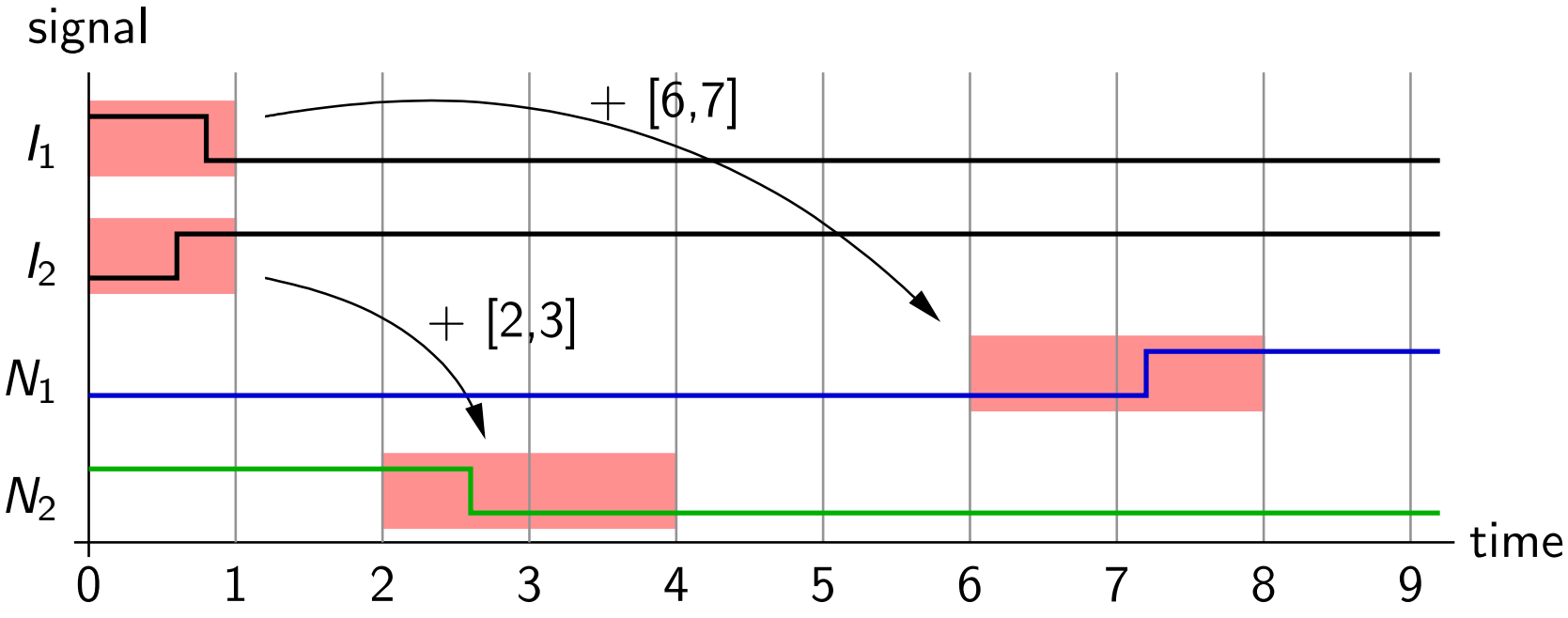

Motivation – Limitations of the Inverse Method

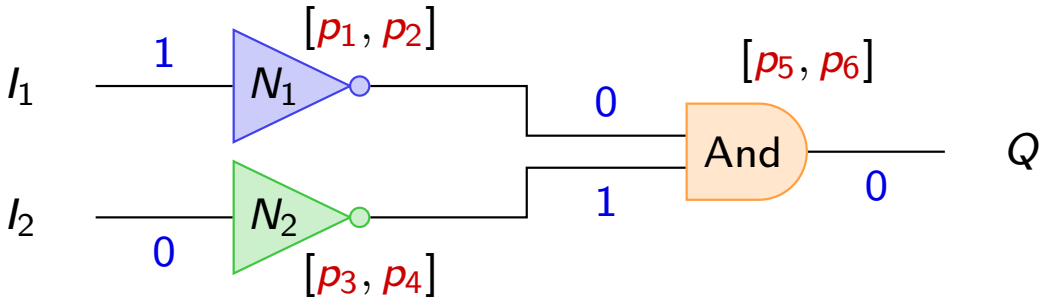

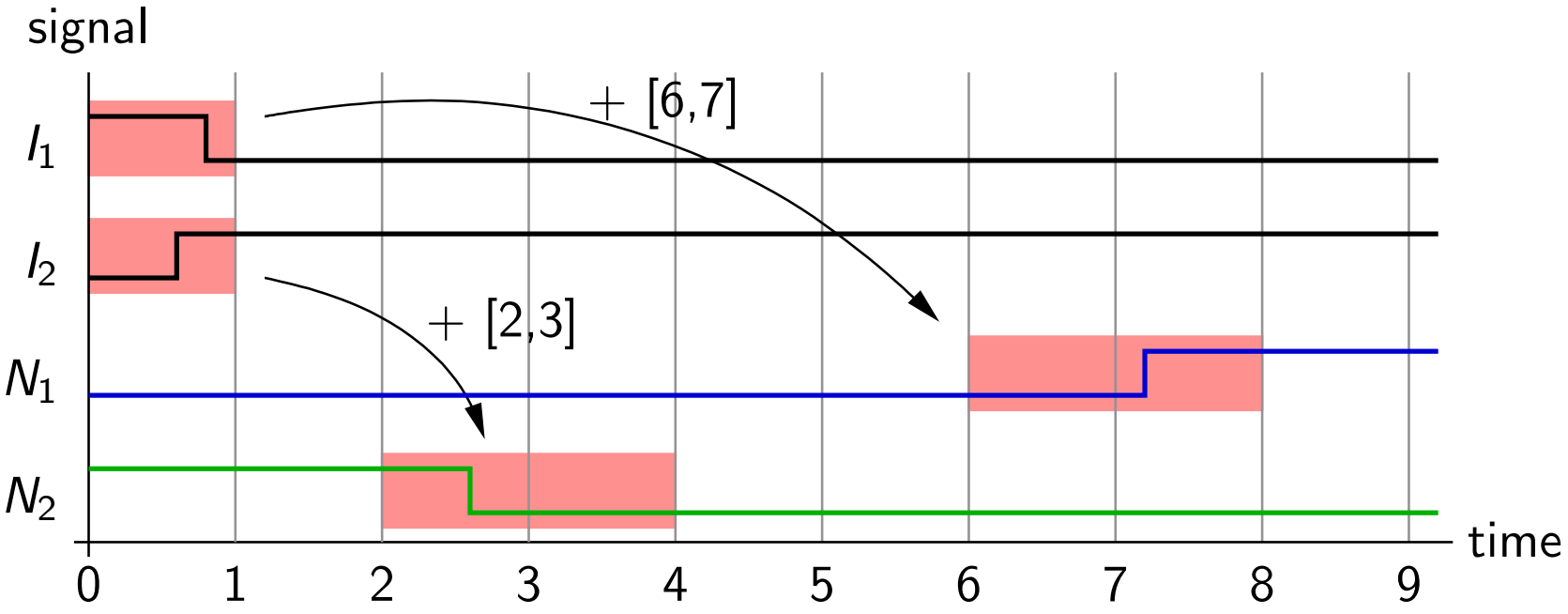

Motivation – Limitations of the Inverse Method

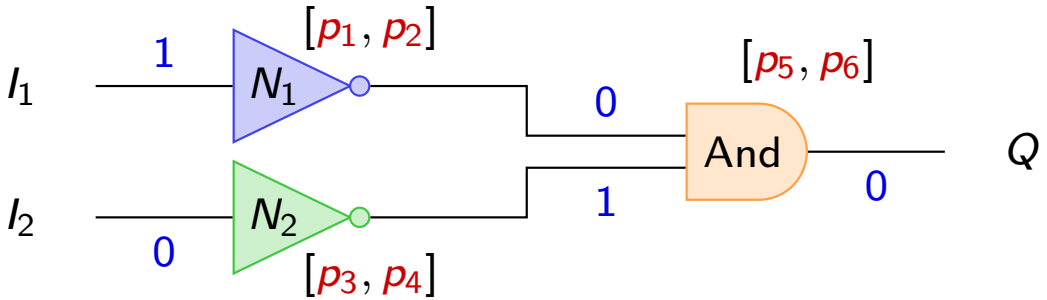

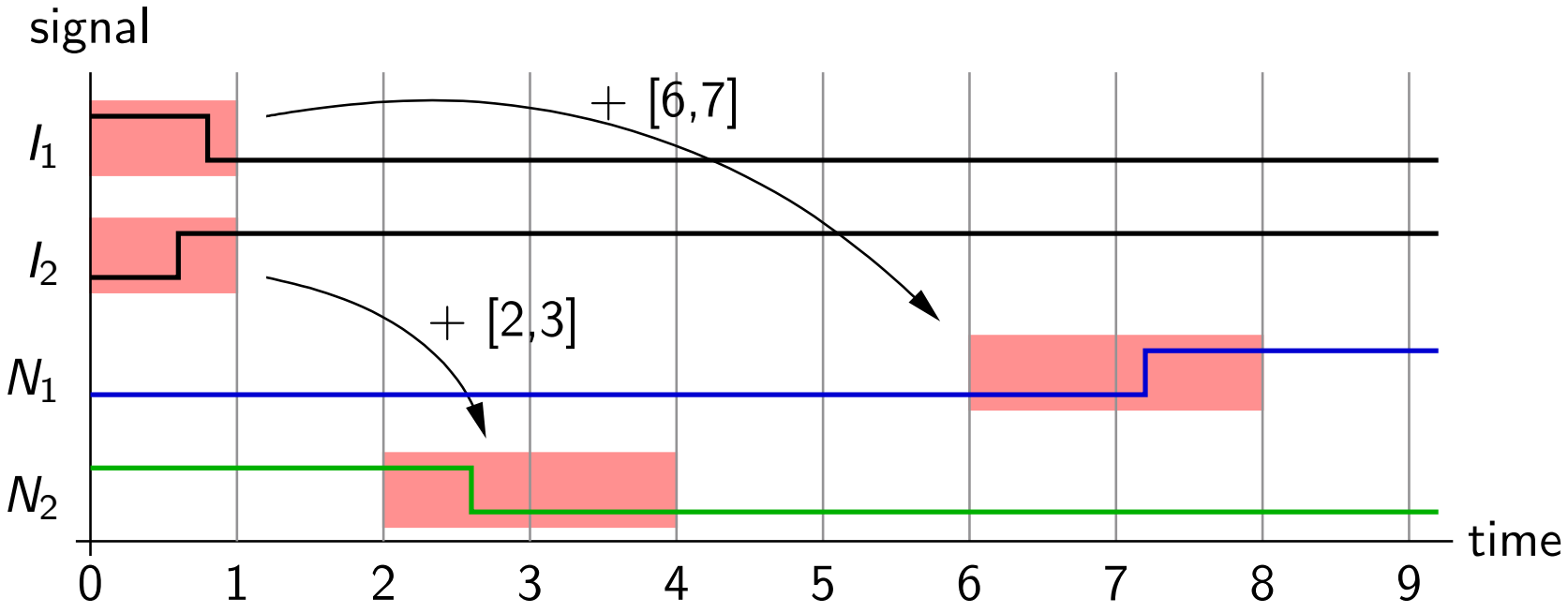

Problem: Specific time delay forces unnecessary sequentialization of *Not* gates
Solution: Preserve partially-order rather than sequential executions!

Outline

Safe Time Petri Nets (TPN): Definition

- Specification of real-time distributed systems
- Strong time semantics (urgency)
- We consider safe time Petri nets

$(P, T, pre, post, efd, lfd, M_0)$

- ${}^\bullet t := pre(t) \subseteq P$
- $t^\bullet := post(t) \subseteq P$
- earliest firing delay:
  $efd : T \longrightarrow \mathbb{N}$
- latest firing delay:
  $lfd : T \longrightarrow \mathbb{N} \cup \{\infty\}$
- initial marking:
  $M_0 \subseteq P$

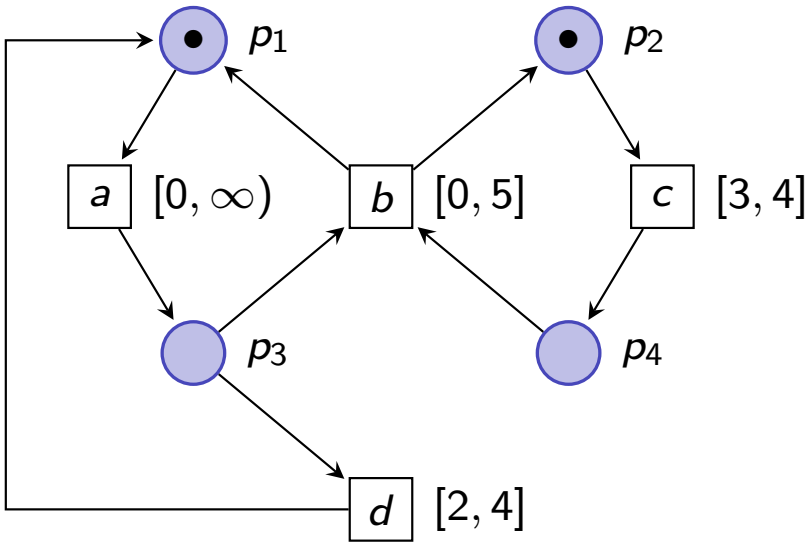

Safe Time Petri Nets: Semantics (Runs)

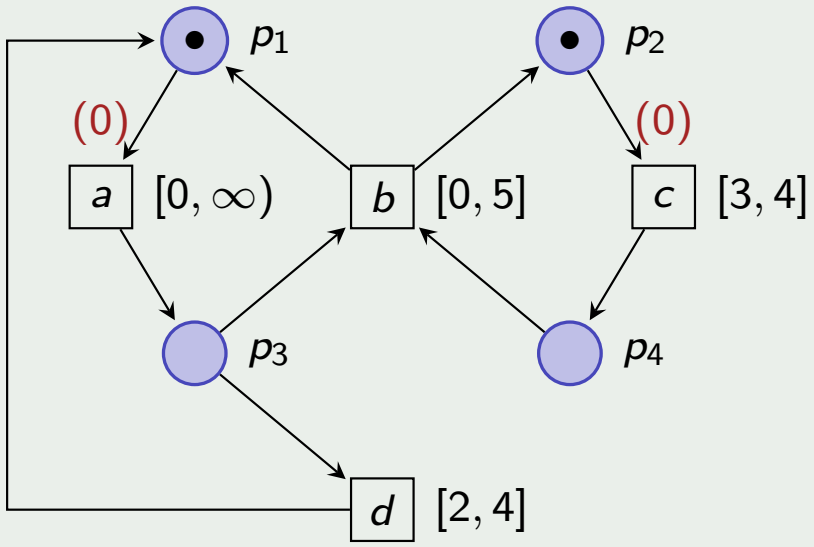

Current time: 0

Possible run:

Definition

$$\begin{aligned} \textbf{runs}(N) &:= \text{set of timed executions in } (T \times \mathbb{R})^* \\ \textbf{untimed-runs}(N) &:= \textit{strip-time}(\textbf{runs}(N)) \end{aligned}$$

Safe Time Petri Nets: Semantics (Runs)

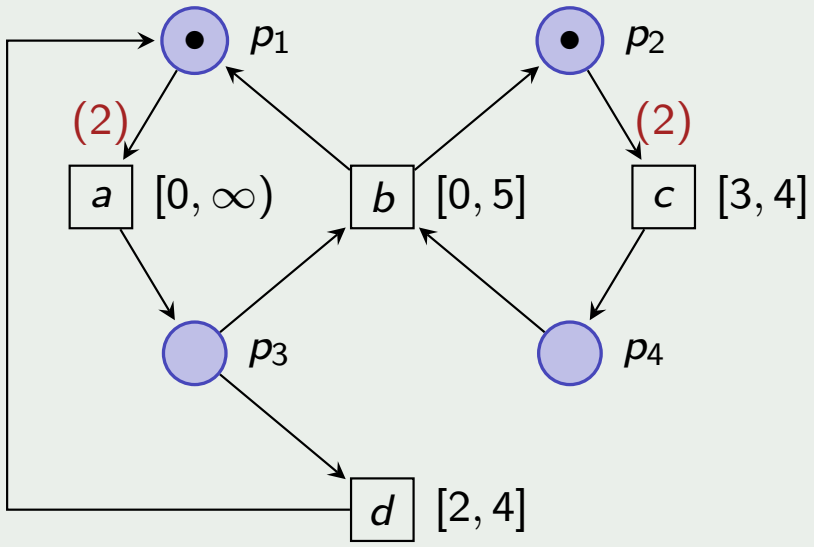

Current time: 2

Possible run:

Definition

$$\begin{aligned} \textbf{runs}(N) &:= \text{set of timed executions in } (T \times \mathbb{R})^* \\ \textbf{untimed-runs}(N) &:= \textit{strip-time}(\textbf{runs}(N)) \end{aligned}$$

Safe Time Petri Nets: Semantics (Runs)

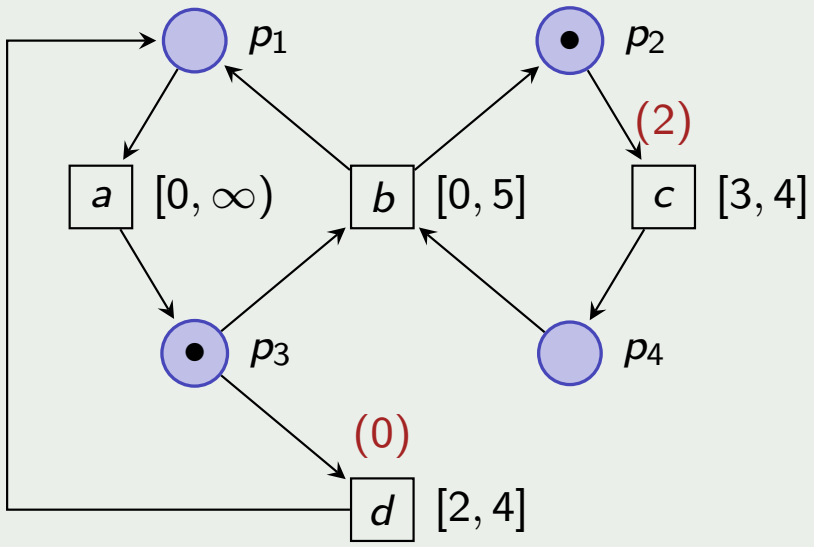

Current time: 2

Possible run: $(a, 2)$

Definition

$$\begin{aligned} \textbf{runs}(N) &:= \text{set of timed executions in } (T \times \mathbb{R})^* \\ \textbf{untimed-runs}(N) &:= \textit{strip-time}(\textbf{runs}(N)) \end{aligned}$$

Safe Time Petri Nets: Semantics (Runs)

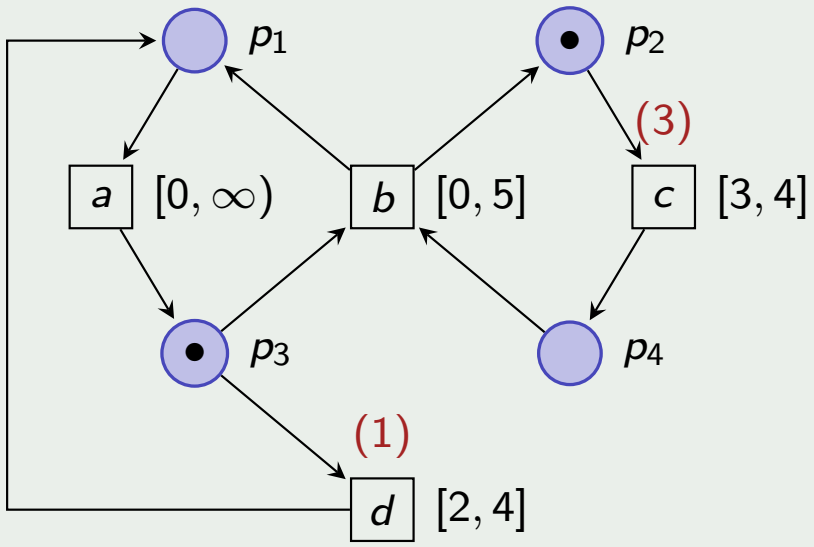

Current time: 3

Possible run: $(a, 2)$

Definition

$$\begin{aligned} \textbf{runs}(N) &:= \text{set of timed executions in } (T \times \mathbb{R})^* \\ \textbf{untimed-runs}(N) &:= \textit{strip-time}(\textbf{runs}(N)) \end{aligned}$$

Safe Time Petri Nets: Semantics (Runs)

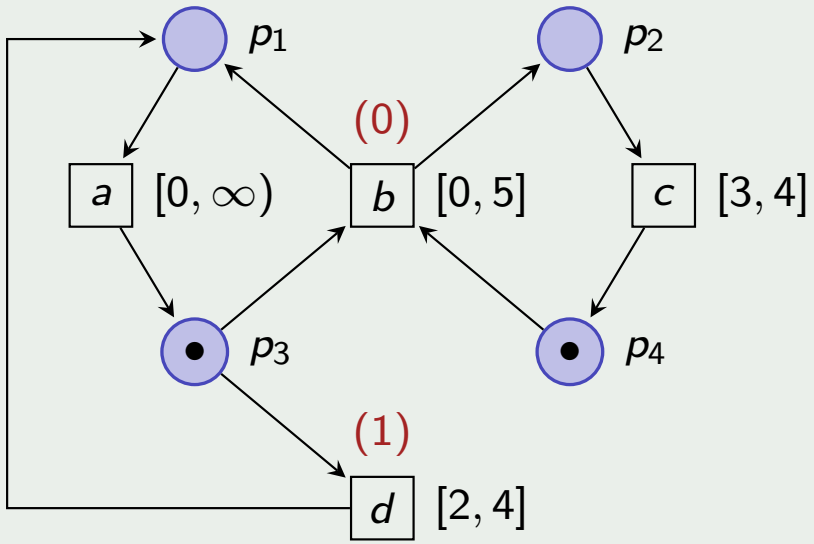

Current time: 3

Possible run: $(a, 2), (c, 3)$

Definition

$$\begin{aligned} \textbf{runs}(N) &:= \text{set of timed executions in } (T \times \mathbb{R})^* \\ \textbf{untimed-runs}(N) &:= \textit{strip-time}(\textbf{runs}(N)) \end{aligned}$$

Safe Time Petri Nets: Semantics (Runs)

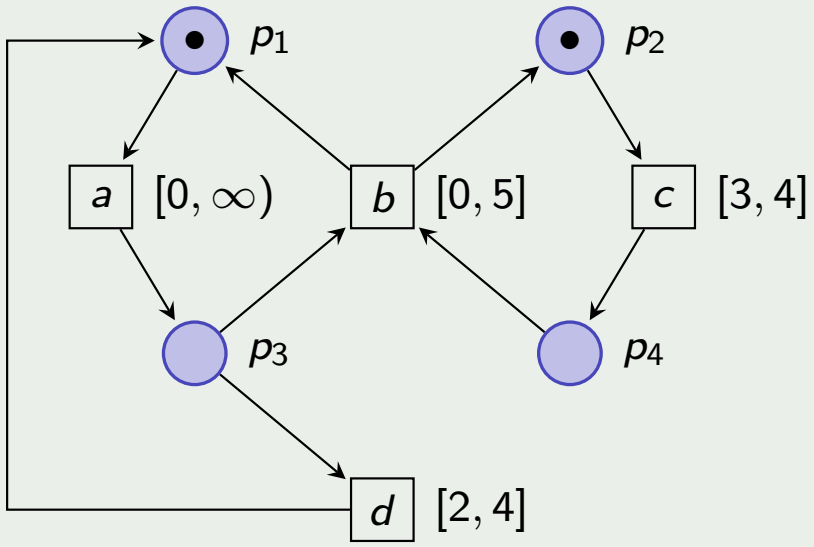

Current time: 6

Possible run: $(a, 2), (c, 3), (b, 6)$

Definition

$$\begin{aligned} \textbf{runs}(N) &:= \text{set of timed executions in } (T \times \mathbb{R})^* \\ \textbf{untimed-runs}(N) &:= \textit{strip-time}(\textbf{runs}(N)) \end{aligned}$$

Safe Time Petri Nets: Semantics (Runs)

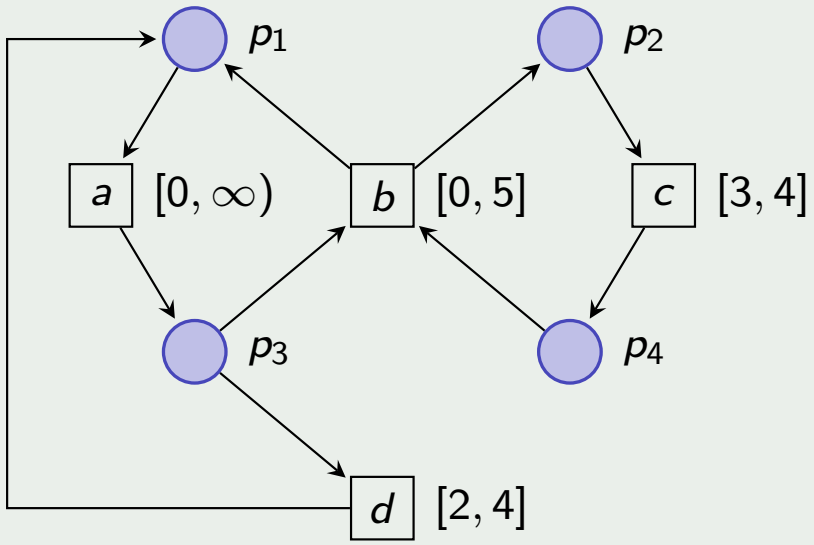

Current time: 6

Possible run: $(a, 2), (c, 3), (b, 6)$

Untimed run: a, c, b

Definition

$$\begin{aligned} \textbf{runs}(N) &:= \text{set of timed executions in } (T \times \mathbb{R})^* \\ \textbf{untimed-runs}(N) &:= \textit{strip-time}(\textbf{runs}(N)) \end{aligned}$$

Processes (Partially-ordered Runs)

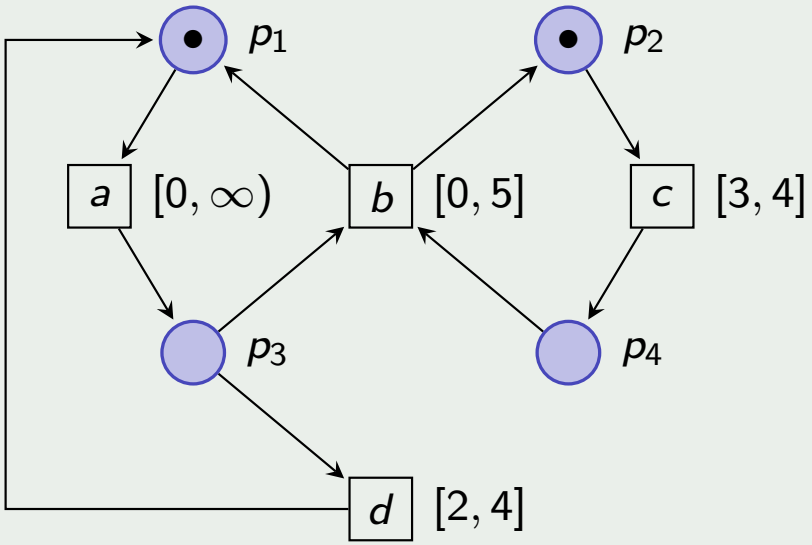

(a,2), (c, 3), (b, 6)

- Events ordered by causality

Processes (Partially-ordered Runs)

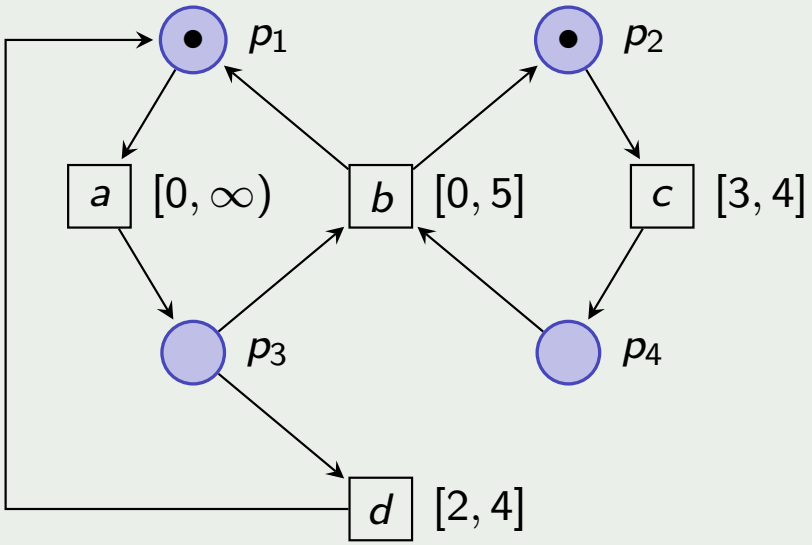

$(a, 2)$

$(c, 3)$

$(b, 6)$

- Events ordered by causality

Processes (Partially-ordered Runs)

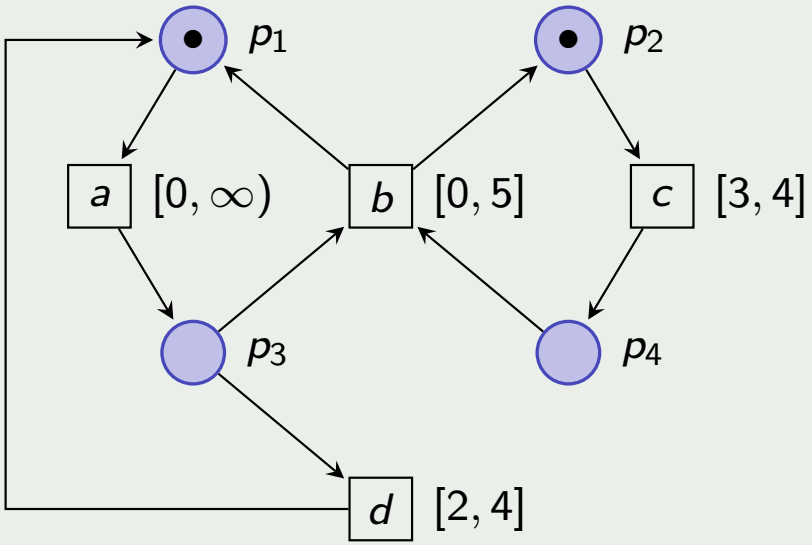

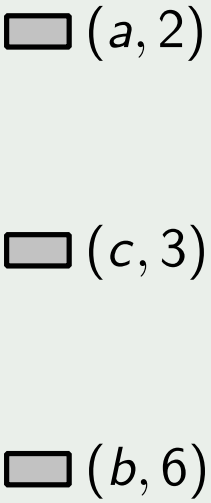

- Events ordered by causality

Processes (Partially-ordered Runs)

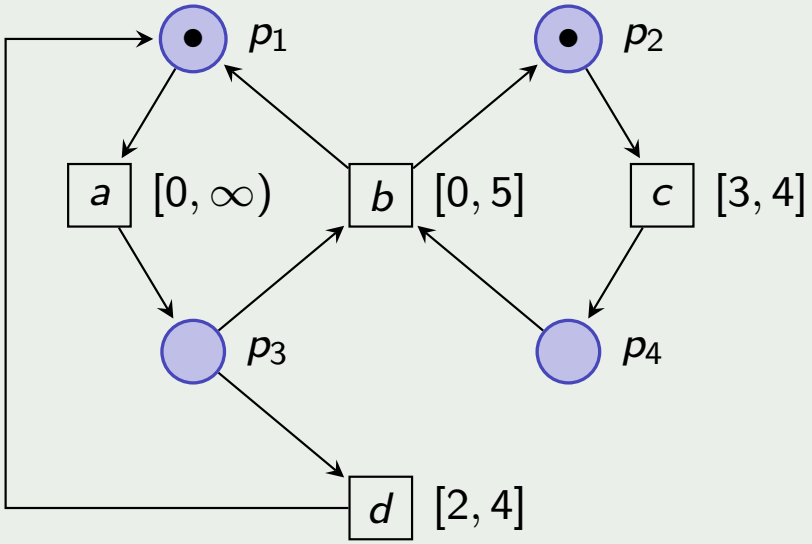

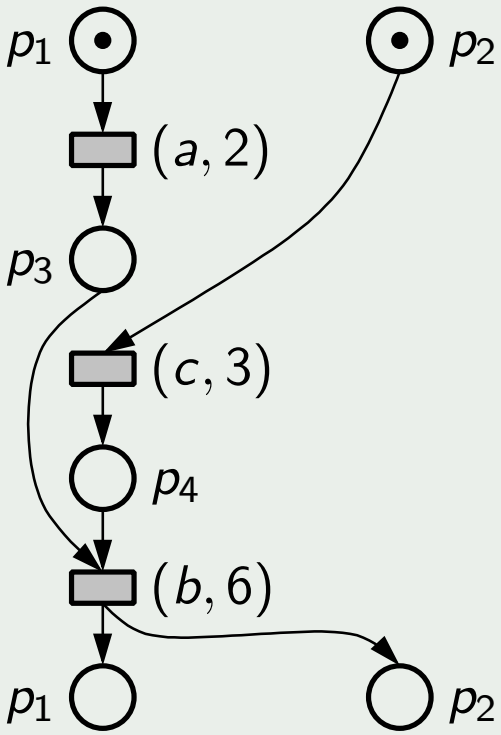

- Events ordered by causality

Processes (Partially-ordered Runs)

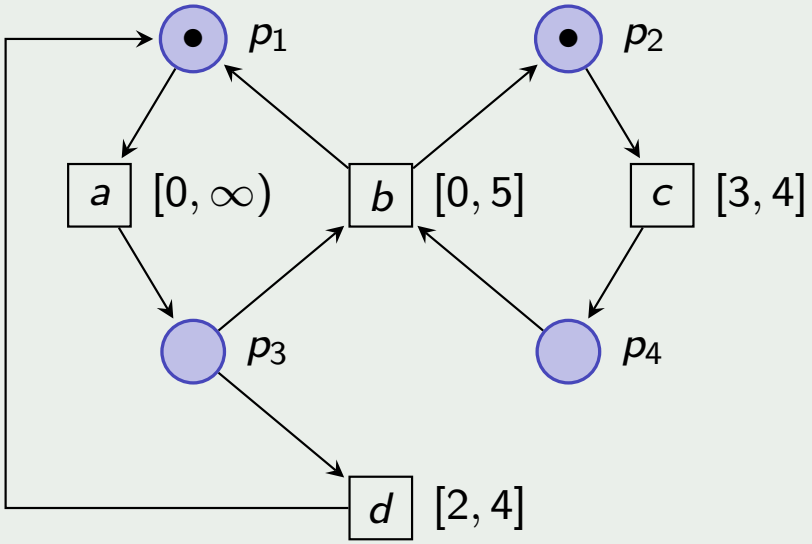

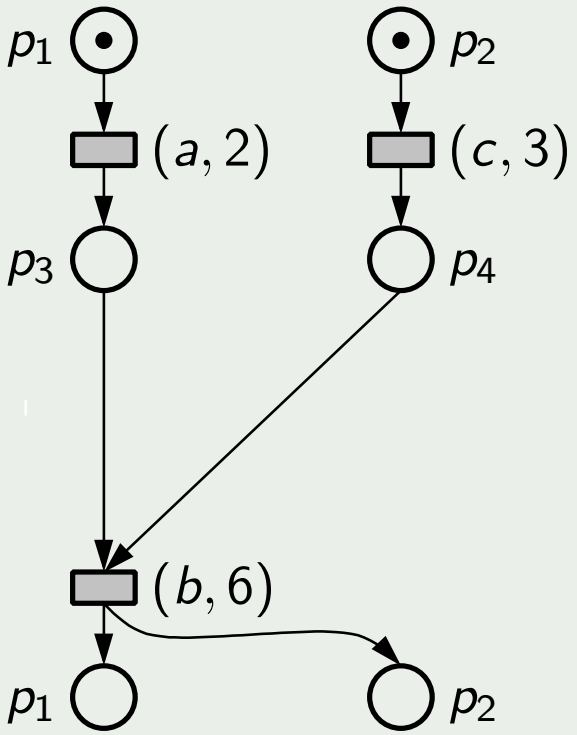

- Events ordered by causality

Processes (Partially-ordered Runs)

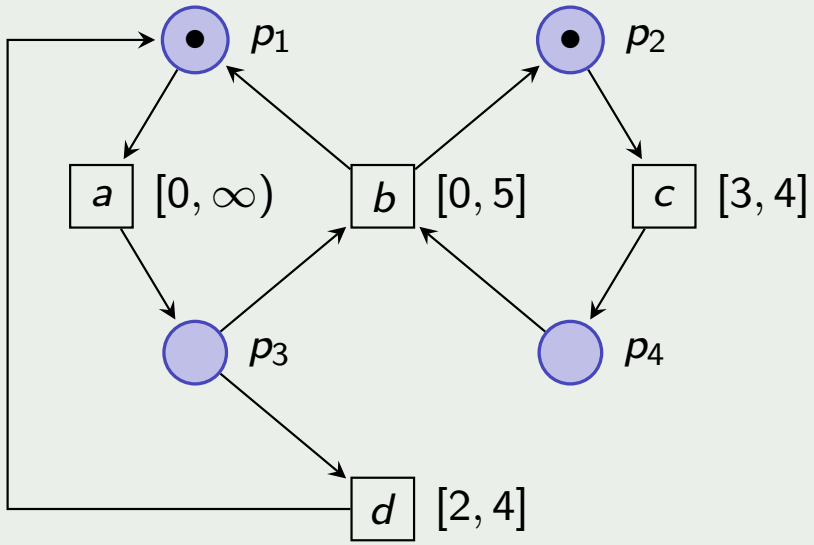

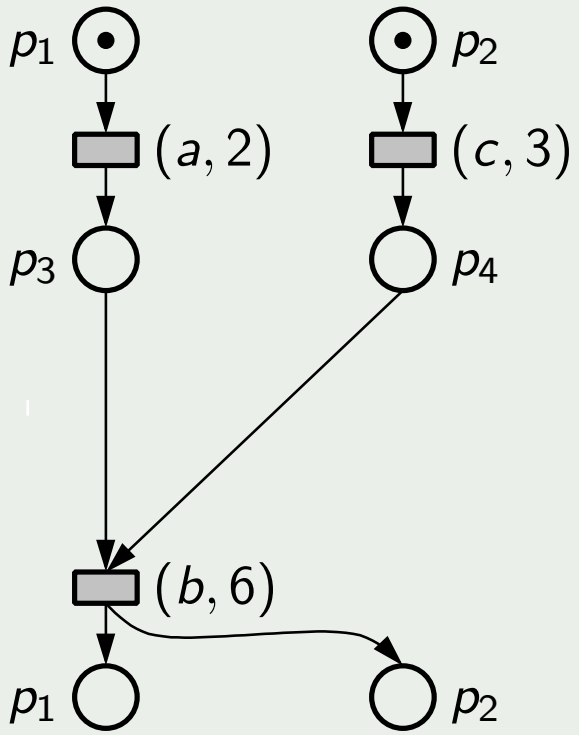

- Events ordered by causality

Definition

$$\textbf{processes}(N) := \textit{partial-order-of}(\textbf{runs}(N))$$

$$\textbf{untimed-processes}(N) := \textit{strip-time}(\textbf{processes}(N))$$

Processes (Partially-ordered Runs)

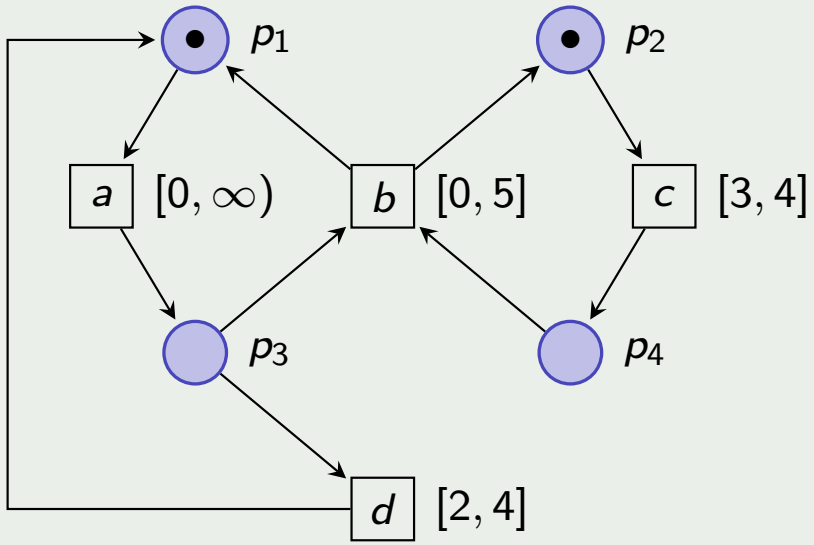

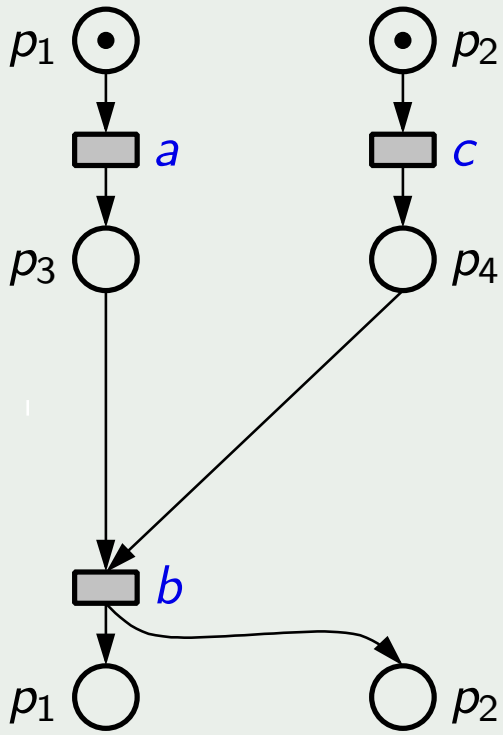

- Events ordered by causality

Definition

$$\textbf{processes}(N) := \textit{partial-order-of}(\textbf{runs}(N))$$

$$\textbf{untimed-processes}(N) := \textit{strip-time}(\textbf{processes}(N))$$

Parametric TPNs and Parameter Valuations

Let $P := \{p_1, \ldots, p_n\}$ be a set of parameters:

- A parametric TPN over P is a TPN $\mathcal{N}$ with delay bounds over $\mathbb{N} \cup \{\infty\} \cup P$
- A parameter valuation is a function $v \colon P \to \mathbb{R}$.
- Notation $\mathcal{N}[\![\mathrm{v}]\!]$ denotes parameter substitution:

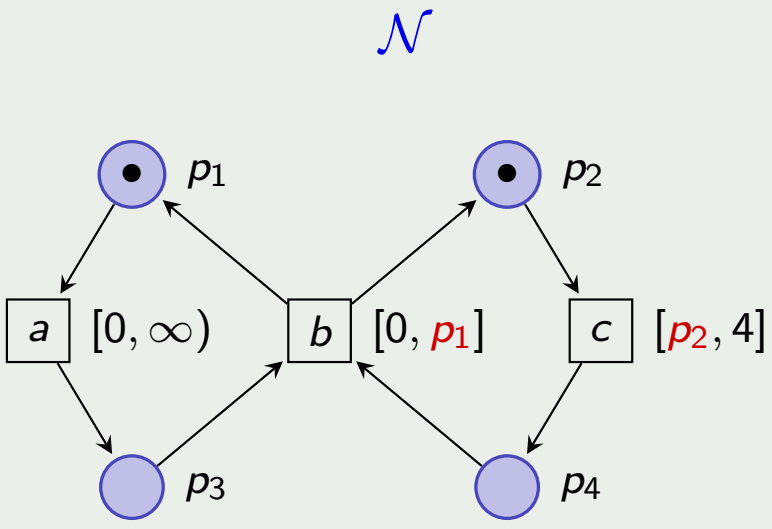

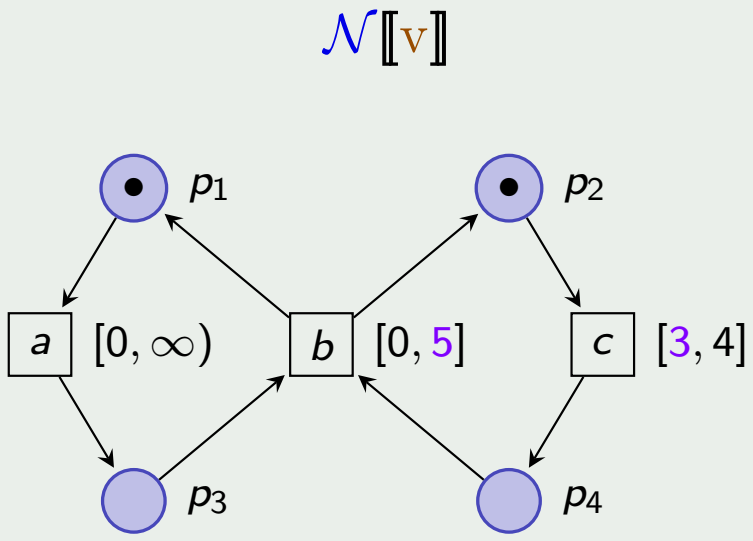

with $v(p_1) = 5$ and $v(p_2) = 3$

Inverse Method with Partial Orders (IMPO)

The problem

Given

- a parametric TPN $\mathcal{N}$ over parameters P, and
- a reference parameter valuation v_0,

find parameter valuations $v \colon P \to \mathbb{R}$ (i.e., a constraint over P) such that

$$\textbf{untimed-processes}(\mathcal{N}[\![\mathrm{v}]\!]) \subseteq \textbf{untimed-processes}(\mathcal{N}[\![\mathrm{v}_0]\!]).$$

Our solution in a nutshell

1. Enumerate all untimed processes of (the support of) $\mathcal{N}$
2. To each of them, associate a linear constraint K over P
3. Select those which $\mathcal{N}[\![\mathrm{v}_0]\!]$ cannot produce
4. Return linear constraint over P forbidding exactly those processes

Step 1: Enumerate all Untimed Processes

A Compute the unfolding of the untimed support of $\mathcal{N}$

B Extract the set of maximal processes

Example

Our circuit:

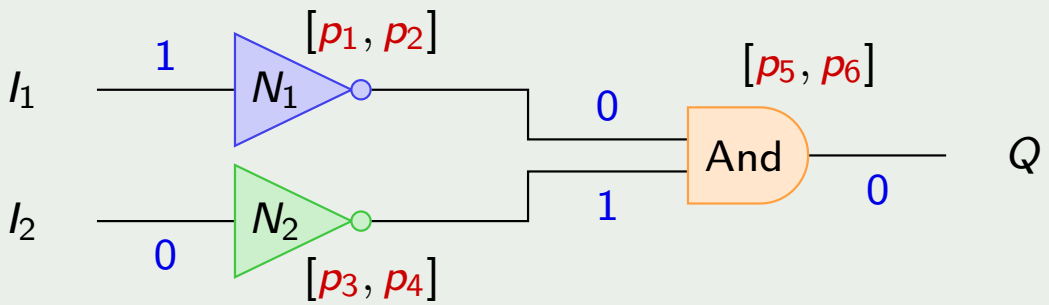

Reference valuation:

$[p_1, p_2] := [6, 7]$
$[p_3, p_4] := [2, 3]$
$[p_5, p_6] := [1, 2]$

Its unfoldings: next slide ...

Step 1: Example: the Unfolding

Maximal processes:

$\mathcal{R}_1 = \{e_1, e_4, e_2, e_5\}$

$\mathcal{R}_2 = \{e_1, e_4, e_2, e_8, e_5', e_9\}$

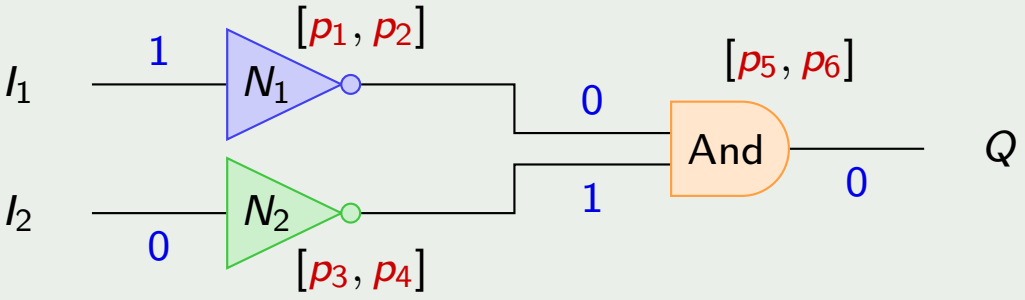

Unfolding:

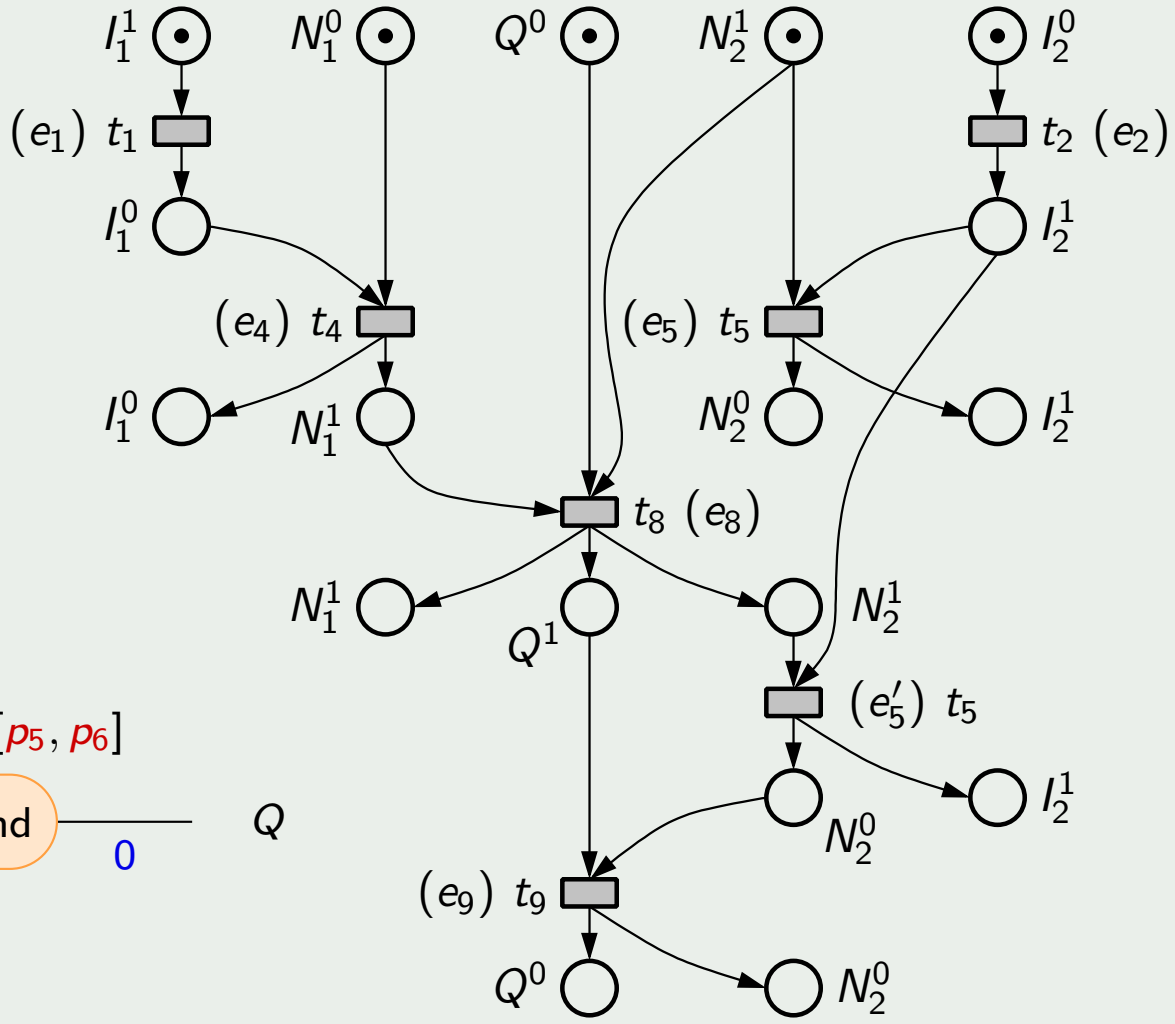

Step 2: Linear Constraint for each Process

For each untimed process $\mathcal{R}$, we build a linear constraint $K_{\mathcal{R}}$ over P:

- $K_{\mathcal{R}}$: parameter valuations v such that $\mathcal{R}$ is a process of $\mathcal{N}[\![\mathrm{v}]\!]$

A Build constraint $K'_{\mathcal{R}}$ over some new <u>date variables</u> Z and parameters P

B Eliminate the date variables Z from $K'_{\mathcal{R}}$

Step 2.A: Symbolic Characterization of Processes [AL00]

Two timed runs may have the same untimed process:

(a,2), (c,3), (b,6)

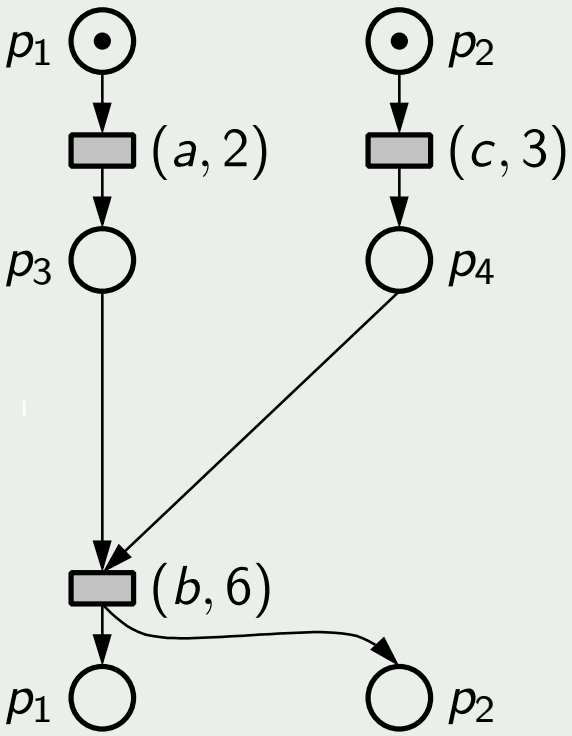

(a,1), (c,3), (b,6)

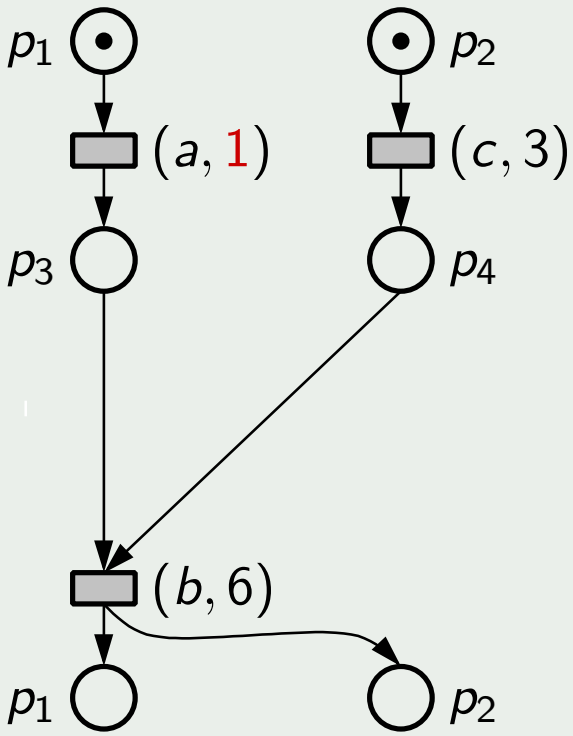

[T. Aura, J. Lilius 2000]

Step 2.A: Symbolic Characterization of Processes [AL00]

- ...so we represent symbolically dates of processes sharing same partial-order
- 1 variable z_i per event date

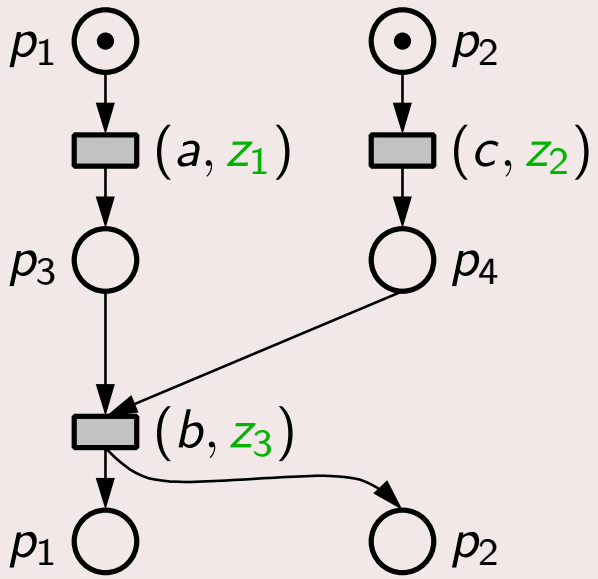

Step 2.A: Symbolic Characterization of Processes [AL00]

- ...so we represent symbolically dates of processes sharing same partial-order
- 1 variable z_i per event date

1. For every event e:
   $efd(e) \leq z_e - doe(e) \leq lfd(e)$

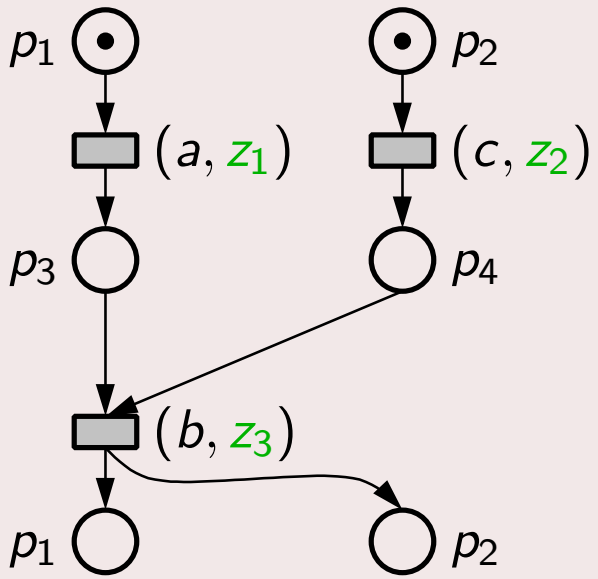

Step 2.A: Symbolic Characterization of Processes [AL00]

- ...so we represent symbolically dates of processes sharing same partial-order
- 1 variable z_i per event date

1. For every event e:
   $efd(e) \leq z_e - doe(e) \leq lfd(e)$

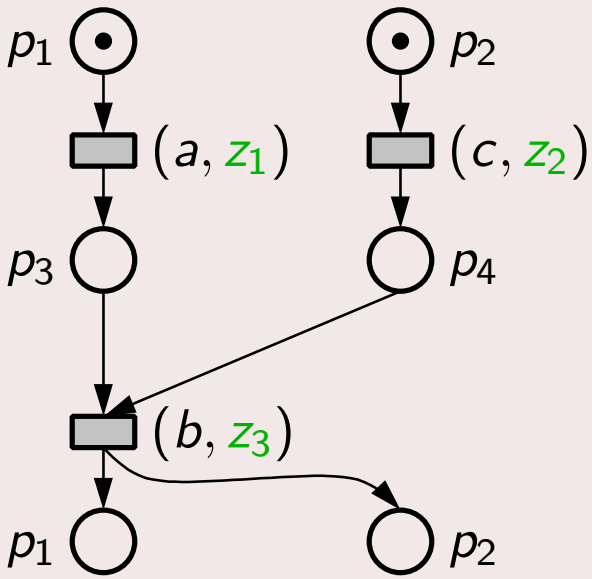

- $0 \leq z_1 \leq \infty$
  $3 \leq z_2 \leq 4$
  $0 \leq z_3 - \max\{z_1, z_2\} \leq 5$

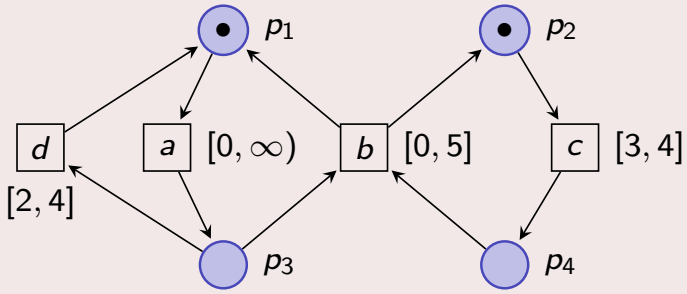

Step 2.A: Symbolic Characterization of Processes [AL00]

- ...so we represent symbolically dates of processes sharing same partial-order
- 1 variable z_i per event date

1. For every event e:
   $efd(e) \leq z_e - doe(e) \leq lfd(e)$
2. For every transition t enabled in the final state:
   $z_{\text{end}} \leq doe(t) + lfd(t)$

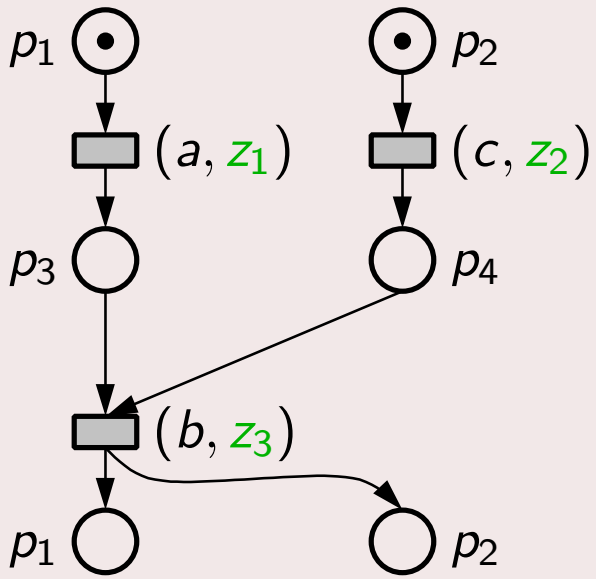

- $0 \leq z_1 \leq \infty$
  $3 \leq z_2 \leq 4$
  $0 \leq z_3 - \max\{z_1, z_2\} \leq 5$

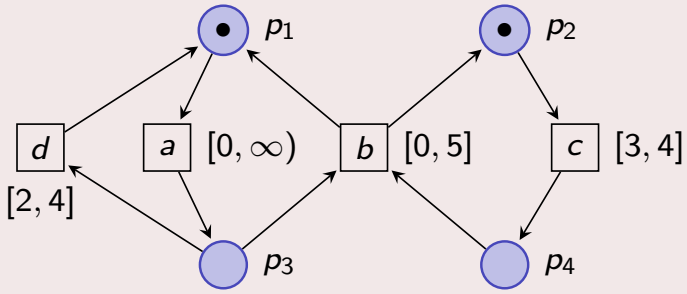

Step 2.A: Symbolic Characterization of Processes [AL00]

- ...so we represent symbolically dates of processes sharing same partial-order
- 1 variable z_i per event date

1. For every event e:
   $efd(e) \leq z_e - doe(e) \leq lfd(e)$
2. For every transition t enabled in the final state:
   $z_{\text{end}} \leq doe(t) + lfd(t)$

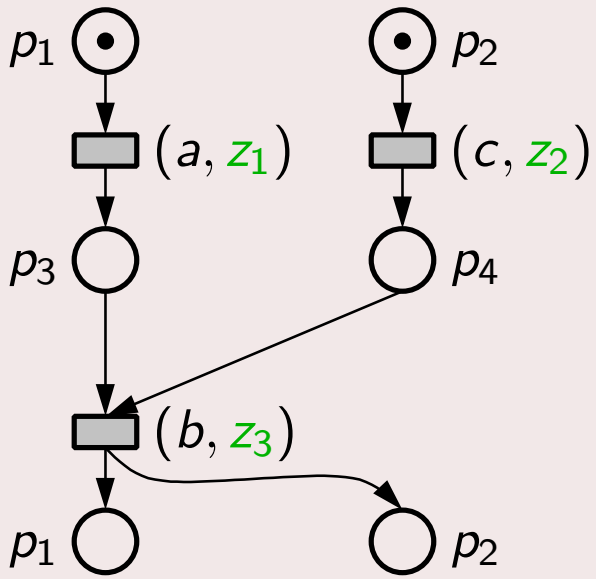

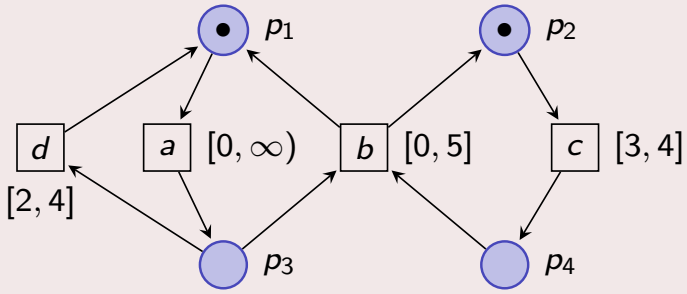

- $0 \leq z_1 \leq \infty$
  $3 \leq z_2 \leq 4$
  $0 \leq z_3 - \max\{z_1, z_2\} \leq 5$
- $\max\{z_1, z_2, z_3\} \leq z_3 + \infty$
  $\max\{z_1, z_2, z_3\} \leq z_3 + 4$

Step 2.A: Symbolic Characterization of Processes [AL00]

- ...so we represent symbolically dates of processes sharing same partial-order
- 1 variable z_i per event date

1. For every event e:
   $efd(e) \leq z_e - doe(e) \leq lfd(e)$
2. For every transition t enabled in the final state:
   $z_{\text{end}} \leq doe(t) + lfd(t)$
3. No transition eventually enabled overtakes its latest firing delay

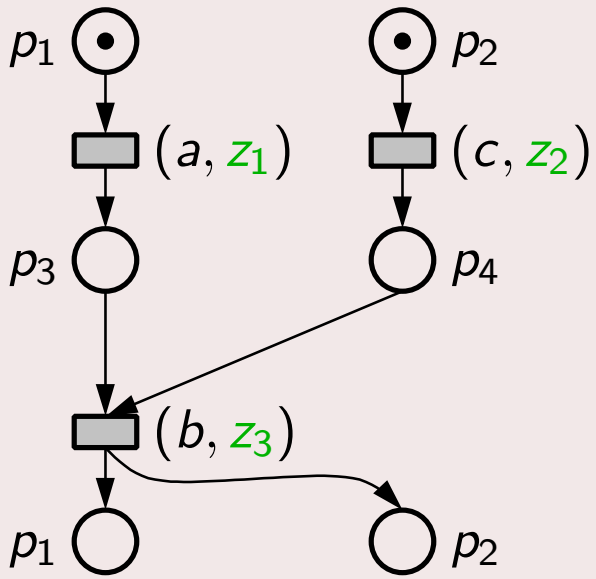

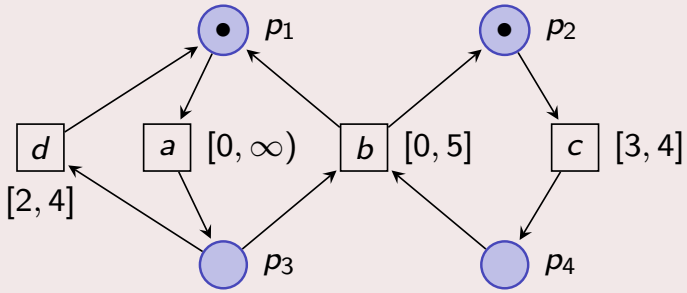

- $0 \leq z_1 \leq \infty$
  $3 \leq z_2 \leq 4$
  $0 \leq z_3 - \max\{z_1, z_2\} \leq 5$
- $\max\{z_1, z_2, z_3\} \leq z_3 + \infty$
  $\max\{z_1, z_2, z_3\} \leq z_3 + 4$

Step 2.A: Symbolic Characterization of Processes [AL00]

- ...so we represent symbolically dates of processes sharing same partial-order
- 1 variable z_i per event date

1. For every event e:
   $efd(e) \leq z_e - doe(e) \leq lfd(e)$
2. For every transition t enabled in the final state:
   $z_{\text{end}} \leq doe(t) + lfd(t)$
3. No transition eventually enabled overtakes its latest firing delay

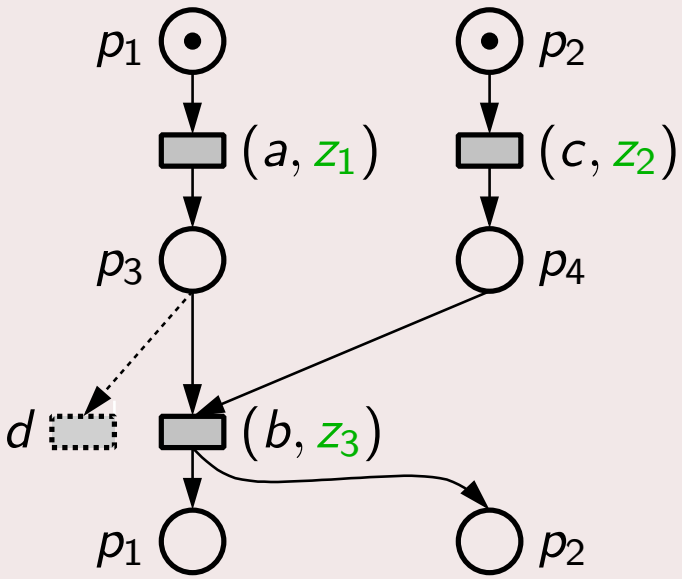

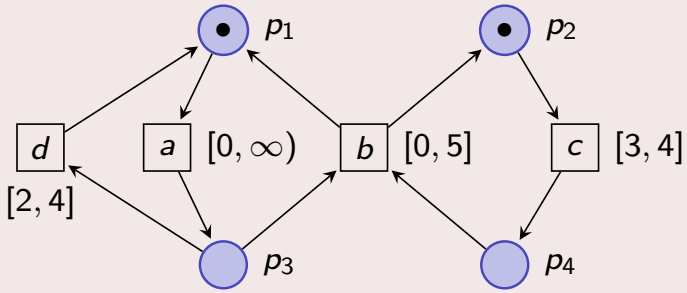

- $0 \leq z_1 \leq \infty$
  $3 \leq z_2 \leq 4$
  $0 \leq z_3 - \max\{z_1, z_2\} \leq 5$
- $\max\{z_1, z_2, z_3\} \leq z_3 + \infty$
  $\max\{z_1, z_2, z_3\} \leq z_3 + 4$

Step 2.A: Symbolic Characterization of Processes [AL00]

- ...so we represent symbolically dates of processes sharing same partial-order
- 1 variable z_i per event date

1. For every event e:
   $efd(e) \leq z_e - doe(e) \leq lfd(e)$
2. For every transition t enabled in the final state:
   $z_{\text{end}} \leq doe(t) + lfd(t)$
3. No transition eventually enabled overtakes its latest firing delay

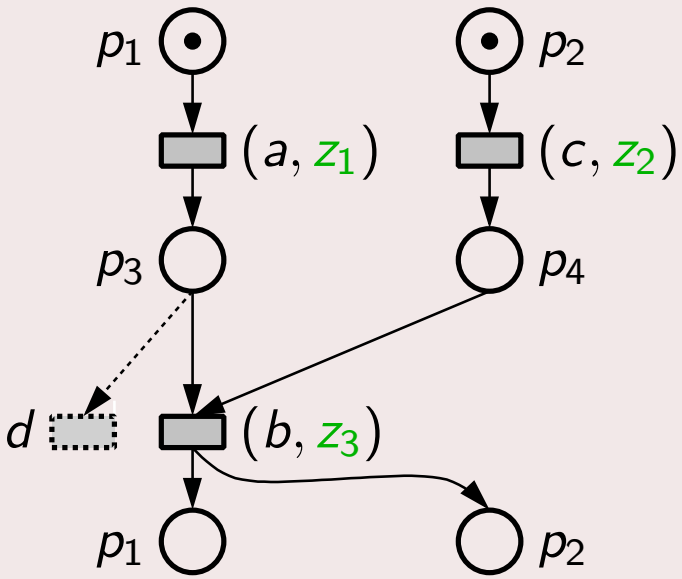

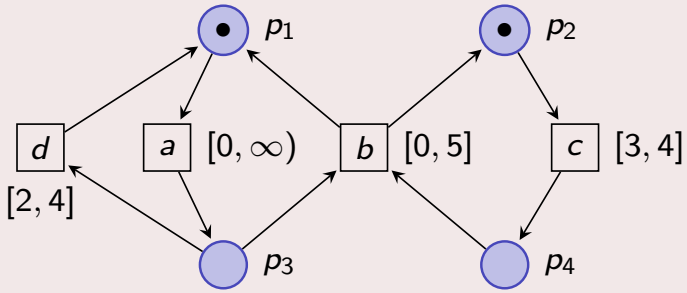

- $0 \leq z_1 \leq \infty$
  $3 \leq z_2 \leq 4$
  $0 \leq z_3 - \max\{z_1, z_2\} \leq 5$
- $\max\{z_1, z_2, z_3\} \leq z_3 + \infty$
  $\max\{z_1, z_2, z_3\} \leq z_3 + 4$
- $z_3 - z_1 \leq 4$

Step 2.A: Processes of Parametric TPNs

For an untimed process $\mathcal{R}$ of a non-parametric TPN $\mathcal{N}$ we

- generate linear constraint $K'_{\mathcal{R}}$

over the variables:

- date variables $Z := \{z_1, \ldots, z_m\}$

Step 2.A: Processes of Parametric TPNs

For an untimed process $\mathcal{R}$ of a parametric TPN $\mathcal{N}$ we

- generate linear constraint $K'_{\mathcal{R}}$

over the variables:

- date variables $Z := \{z_1, \ldots, z_m\}$,
- system parameters $P := \{p_1, \ldots, p_n\}$.

Step 2.A: Processes of Parametric TPNs

For an untimed process $\mathcal{R}$ of a parametric TPN $\mathcal{N}$ we

- generate linear constraint $K'_{\mathcal{R}}$

over the variables:

- date variables $Z := \{z_1, \ldots, z_m\}$,
- system parameters $P := \{p_1, \ldots, p_n\}$.

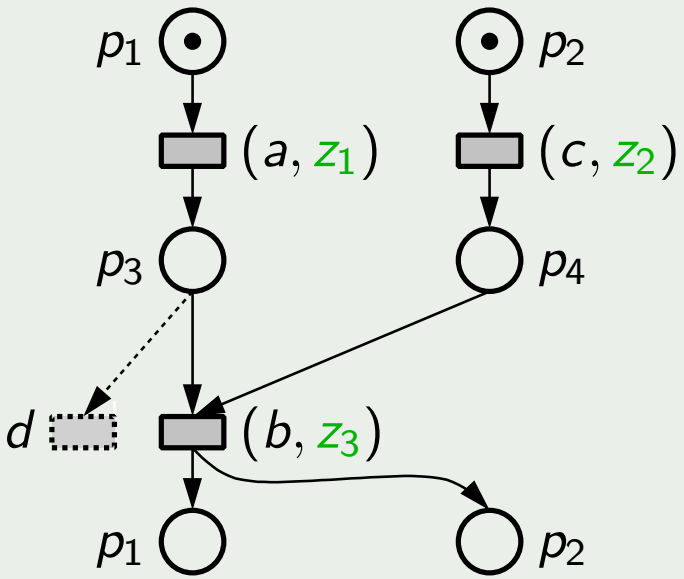

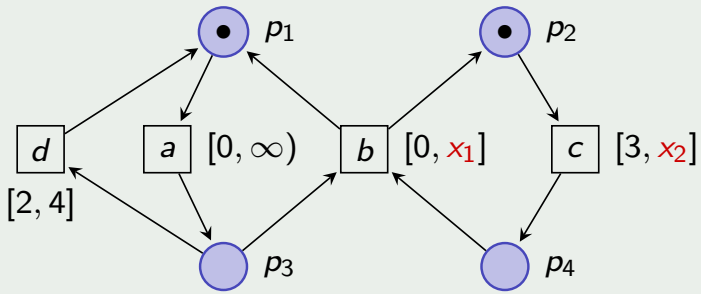

- $0 \leq z_1 \leq \infty$
  $3 \leq z_2 \leq p_2$
  $0 \leq z_3 - \max\{z_1, z_2\} \leq p_1$
- $\max\{z_1, z_2, z_3\} \leq z_3 + \infty$
  $\max\{z_1, z_2, z_3\} \leq z_3 + p_2$
- $z_3 - z_1 \leq 4$

Parameter Synthesis Procedure

For a PTPN $\mathcal{N}$ over parameters P (where all untimed processes are finite):

1. Enumerate all untimed processes of the support of $\mathcal{N}$
   - A Compute untimed unfolding of $\mathcal{N}$
   - B Extract set $\mathcal{M}$ of maximal processes
2. For every process $\mathcal{R} \in \mathcal{M}$,
   - A Build constraint $K'_{\mathcal{R}}$ over the date variables Z and parameters P
   - B Obtain $K_{\mathcal{R}}$ from $K'_{\mathcal{R}}$ by eliminating date variables Z
3. Let $\mathcal{M}'$ be the set of processes $\mathcal{R}$ such that $v_0 \not\models K_{\mathcal{R}}$
4. Output constraint over P forbidding $\mathcal{M}'$:

$$K_0 \wedge \bigwedge_{\mathcal{R} \in \mathcal{M}'} \neg K_{\mathcal{R}}$$

Steps 2, 3, 4: Example

Maximal processes:

$\mathcal{R}_1 = \{e_1, e_4, e_2, e_5\}$

$\mathcal{R}_2 = \{e_1, e_4, e_2, e_8, e_5', e_9\}$

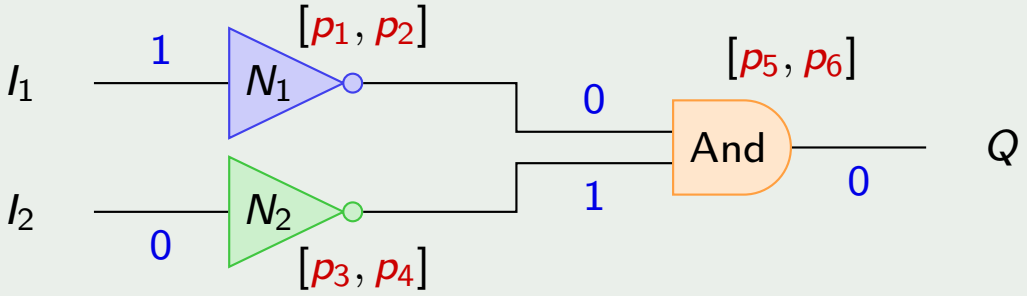

Unfolding:

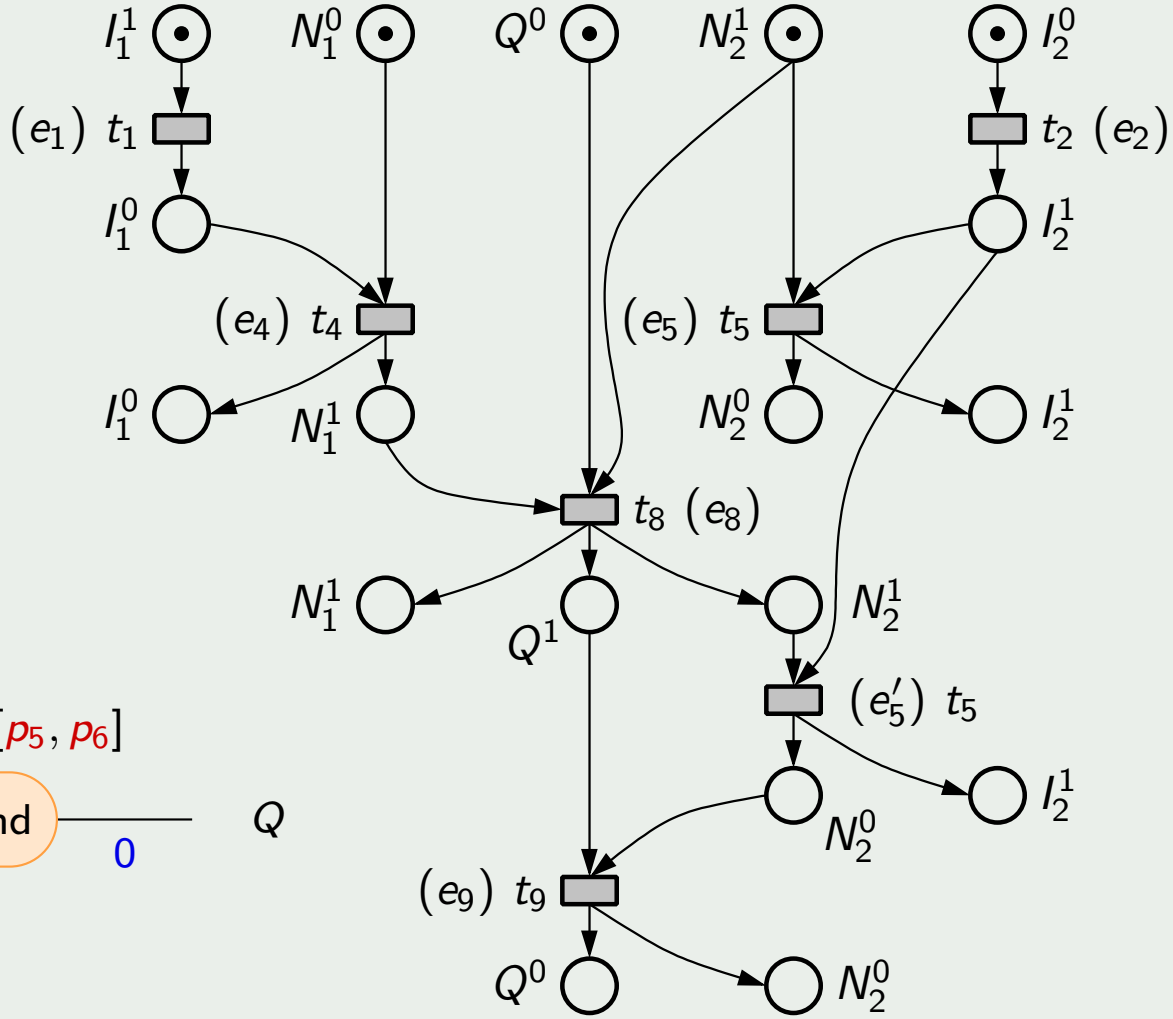

Steps 2, 3, 4: Example

$\mathcal{R}_1 = \{e_1, e_4, e_2, e_5\}$

- Constraint $K'_{\mathcal{R}_1}$:

  $0 \leq z_1 \leq 1$
  $0 \leq z_2 \leq 1$
  $p_1 \leq z_4 - z_1 \leq p_2$
  $p_3 \leq z_5 - z_2 \leq p_4$
  $z_5 \leq z_4 + p_6$

- After elimination of z_i variables:

  $p_3 \leq p_2 + p_6 + 1$

- Satisfied by v_0: ✗ (skipped)

$\mathcal{R}_2 = \{e_1, e_4, e_2, e_8, e'_5, e_9\}$

- Constraint $K'_{\mathcal{R}_2}$:

  $0 \leq z_1 \leq 1$
  $0 \leq z_2 \leq 1$
  $p_1 \leq z_4 - z_1 \leq p_2$
  $p_5 \leq z_8 - z_4 \leq p_6$
  $p_3 \leq y'_5 - \max\{z_8, z_2\} \leq p_4$
  $p_5 \leq z_9 - y'_5 \leq p_6$
  $z_8 \leq z_2 + p_4$

- After elimination of z_i variables:

  $p_1 + p_5 \leq p_4 + 1$

- Not satisfied by v_0: ✓ (taken)

Output: $K_0 \wedge \left(N_1^- + A^- > N_2^+ + 1\right)$

Preserving sequential executions requires stronger constraint $N_1^- > N_2^+ + 1$

Concluding Remarks

- Parameter synthesis preserving partial-order reference behaviour
- Enhanced (i.e. weaker) constraints than the Inverse Method
- Restriction: acyclic systems

Perspectives:

- Extension to non-acyclic systems
  - Cutoff events
  - Block-based restriction
- Non-convex constraints: strengthening or efficient implementation
- Implementation

Concluding Remarks

- Parameter synthesis preserving partial-order reference behaviour
- Enhanced (i.e. weaker) constraints than the Inverse Method
- Restriction: acyclic systems

Perspectives:

- Extension to non-acyclic systems
  - Cutoff events
  - Block-based restriction
- Non-convex constraints: strengthening or efficient implementation
- Implementation

Thank you!